RD-100-CP

Tag: _____

Large Area IRMA Roof Drain with 12"x12" Promenade Top

Components:

B2

FD-460-AF

B2-FLG

FC-1

SPECIFICATION: Watts Drainage Products RD-100-CP epoxy coated ductile iron roof drain with deep sump and wide serrated flashing flange, membrane clamp, square adjustable lacquered cast iron collar with square epoxy coated locking type ductile iron grate with 3/8"(10) maximum width drainage slots.

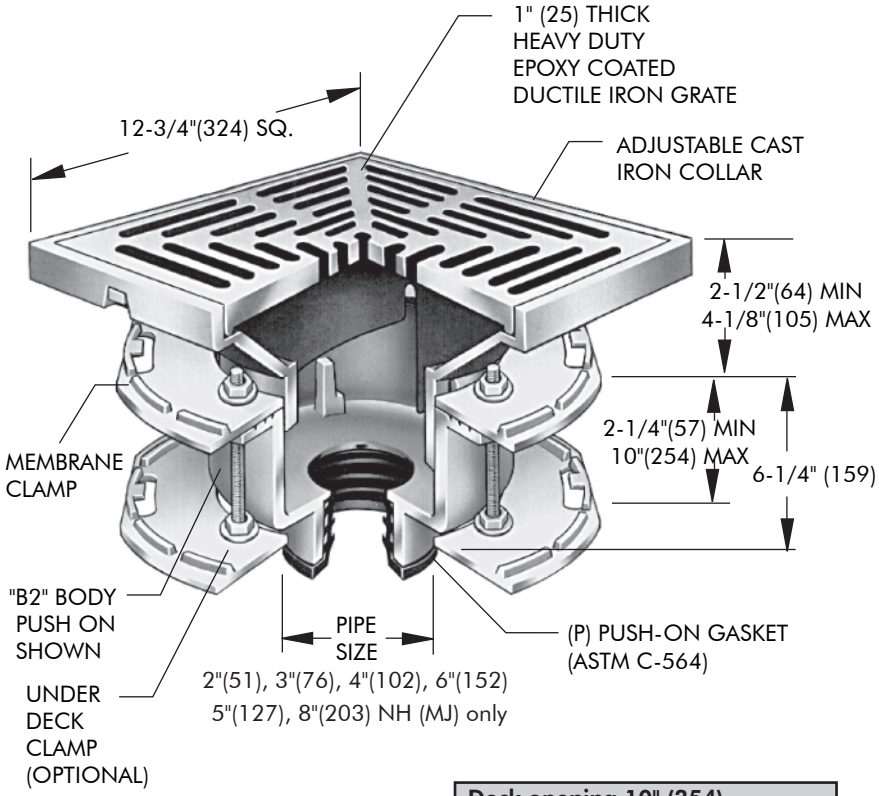

Deck opening 10" (254)
with sump receiver 13-1/4" (337)

Load Rating & Free Area

Suffix	Load Rating	Free Area Sq. In.
CP-1	*XHD	41
CP-3	*XHD	41
CP-4	*XHD	41

* The load classifications are in accordance with the American National Standards ASME A112.21.1M ASME Ratings are as follows:
XHD - Safe Live Load 7500-10000 lbs.(3375-4500kg)
The above categories are given as a guide only.
Please consult factory.

** Side Outlet (-SO) option only available in 2"(51), 3"(76), 4"(102) pipe sizes.
Underdeck Clamp (-BED and -D options) are not available when -SO is selected.

Order Code: RD-10□□-CP-□-□-□

Ex. RD-102P-CP-3

Pipe Sizing (Select One)

Suffix	Description	
2	2"(51) Pipe Size	☐
3	3"(76) Pipe Size	☐
4	4"(102) Pipe Size	☐
5	5"(127) Pipe Size	☐
6	6"(152) Pipe Size	☐
8	8"(203) Pipe Size	☐

Outlet Type (Select One)

Suffix	Description	
NH	No Hub (MJ)	☐
P	Push On	☐
T	Threaded Outlet	☐
X	Inside Caulk	☐

Grate (Select One)

Suffix	Description	
-1	Nickel Bronze	☐
-3	Stainless Steel	☐
-4	Ductile Iron	☐

Options (Select One or More)

Suffix	Description	
-B	Sump Receiver Flange	☐
-C	Secondary Membrane Clamp	☐
-D	Underdeck Clamp	☐
-E	Adjustable Extension	☐
-GSS	Stainless Steel Ballast Guard	☐
-H	Adj. to 6" IRMA Ballast Guard	☐
-SIFC	Flow Control (2", 3", 4" Outlets only) Specify flow required	☐
-SO	Side Outlet**	☐
-V	Fixed Extension (1-1/2",2",3",4")	☐
-W-1	Waterproofing Flange	☐
-Z	Extended Integral Wide Flange	☐
-5	Sediment Bucket	☐
-6	Vandal Proof Top	☐
-9	Hinged Grate	☐
-10	Secured Top	☐
-12	Galvanized Top	☐
-13	All Galvanized	☐
-26	Hinged Locking Grate	☐
-113M	Special Epoxy from 3M Range	☐

Optional Body Material (NH Only)

Suffix	Description	
-60	PVC Body w/Socket Outlet	☐
-61	ABS Body w/Socket Outlet	☐

Job Name _____ Contractor _____

Job Location _____ Contractor's P.O. No. _____

Engineer _____ Representative _____

WATTS Drainage reserves the right to modify or change product design or construction without prior notice and without incurring any obligation to make similar changes and modifications to products previously or subsequently sold. See your WATTS Drainage representative for any clarification. Dimensions are subject to manufacturing tolerances.

CANADA: 5435 North Service Road, Burlington, ON, L7L 5H7 TEL: 905-332-6718 TOLL-FREE: 1-888-208-8927 Website: www.wattsdrainage.ca

© Watts Drainage 2003

(Dimension) Denotes Millimeters